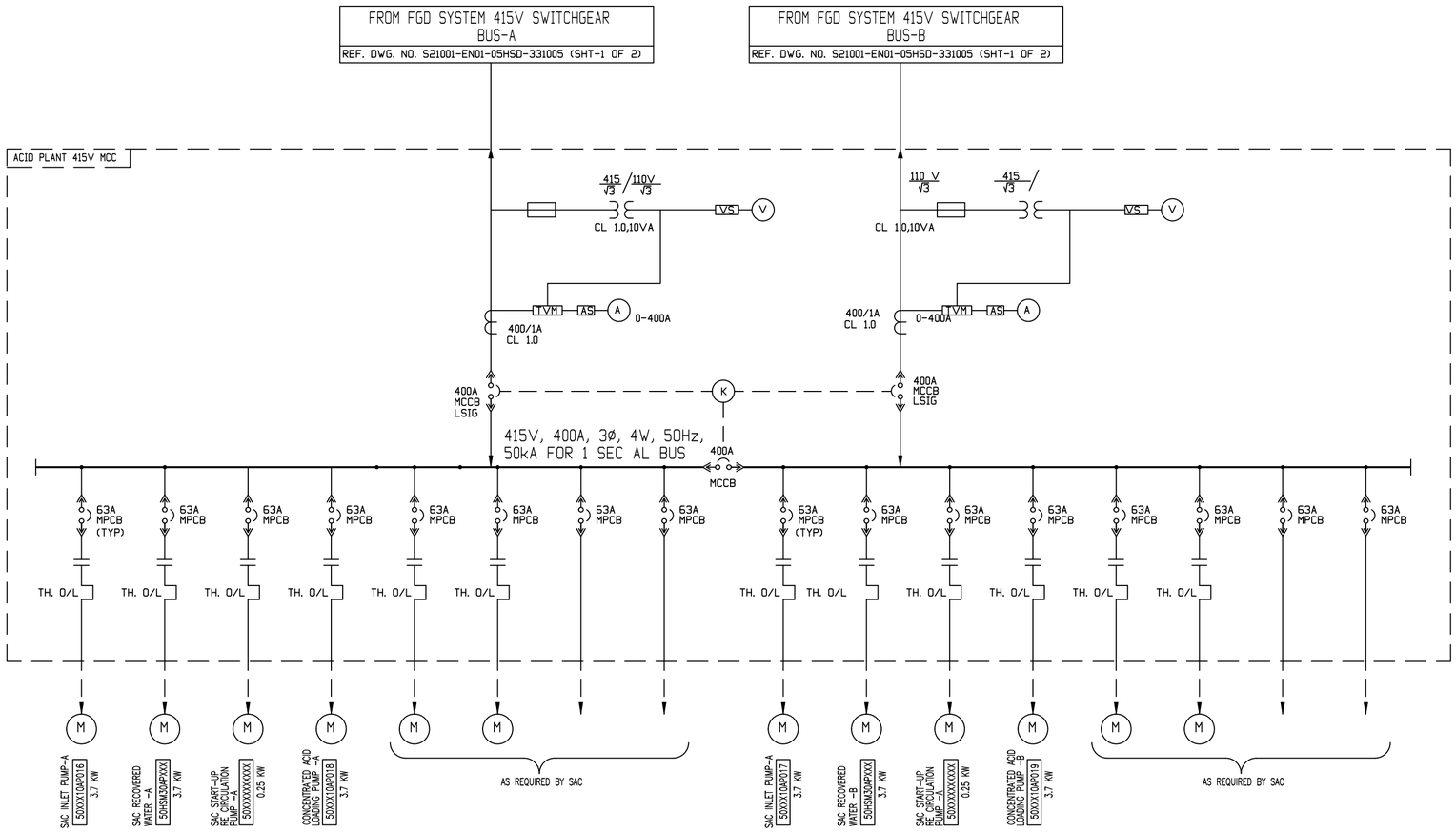

ISSUED FOR	APPROVAL ☑	INFORMATION ☐	MANUFACTURING ☐	CONSTRUCTION ☐	AS-BUILT ☐

REV.	DATE	DESCRIPTION OF REVISIONS	DRAWN	CHECKED	APPR'D
0	03/03/2022	FIRST ISSUE	SM	P.C.	BCB

Owner:
HINDALCO INDUSTRIES LIMITED
Ahura Centre, 1st Floor, B Wing, Mahakali Caves Road, Andheri (East),
Mumbai - 400 093, India

EPCM Contractor:
W. L. GORE & ASSOCIATES (Pacific) Pte, Ltd. India Branch
703, A-Wing, 215 Atrium, Andheri Kurla Road,
Mumbai - 400059, India

Nominated Subcontractor - Engineering, Quality Control, Supervision:
SMARTLuth Solution and Service Pvt. Ltd.
Unit No: 503, 5th Floor, ECO Centre,. EM-4 Sector-V, Salt Lake City,
Kolkata - 700091, India

REV.	ZONE	BY/DT	CHD/DT	APPD/DT	DESCRIPTION	REV.	ZONE	BY/DT	CHD/DT	APPD/DT	DESCRIPTION
REVISION						REVISION					

DESIGNED	DRAWN	CHECKED	APPROV.	REV.	DATE

RELEASE STATUS	DATE	SIGNATURE
PRELIMINARY		
FOR TENDER ONLY		
FOR CONSTRUCTION		
REVIEWED: ARCHITECTURAL		
REVIEWED: CIVIL & STRUCTURAL		
REVIEWED: ELECTRICAL		
REVIEWED: INSTRUMENTATION		
REVIEWED: MECHANICAL		

Hindalco Renusagar U5 1x80 MW PF Captive Power Plant
Flue Gas Desulfurization Project (FGD) with GORE™ SO_2 Control System

SAC – ELECTRICAL SINGLE LINE DIAGRAM

Drg. No. S21001-EN01-05GNE-991001
GORE No. RPDU5.EG.301 SH 2 OF 2
GORE Job No. RPDU5 SCALE: NTS
File: XXXXXXXXXX

This document is a property of W.L. GORE & ASSOCIATES (Pacific) Pte, Ltd. and it may contain trade secrets or privileged, undisclosed or otherwise confidential information.
If you have received this document in error, you are hereby notified that any review, copying or distribution of it is strictly prohibited.

A1 841x594